Make it BIG! is a showcase event that will exhibit leading technologies for industries that manufacture large parts.

AMTIL has brought together a number of key industry partners to demonstrate complete end-to-end manufacturing processes, showing:-

- Data capture and scanning
- CAD modelling
- Tool path generation
- Machining large envelope parts
- Metrology and Inspection

Make it BIG! will be divided into five key cells that will exhibit different types of technology and business practices aimed at industries that manufacture large parts, including **Mining, Aerospace, Marine, Architecture**, and **Movie Industry** .

To register, contact Greg Chalker via email at *gchalker@amtil.com.au*

Dates & Times

Brisbane

QMI Solutions - 33 McKechnie Drive, Eight Mile Plains

- Session 1 - 18th November, from 10am to 2pm. To register click here
- Session 2 - 18th November, from 4pm to 7pm. To register click here
- Session 3 - 19th November, from 1.00pm to 5pm. To register click here

Perth

Polytechnic West - Corner Lloyd Street and Eddie Baron Drive, Midland

- Session 1 - 1st December, from 10am to 2pm
- Session 2 - 1st December, from 4pm to 7pm
- Session 3 - 2nd December, from 10am to 2pm

Melbourne

Alfex Showroom - 17 Military Rd, Broadmeadows

- Session 1 - 8th December, from 10am to 7pm
- Session 2 - 9th December, from 10am to 4pm

Technology on show

Data capture and scanning

Parts will be scanned in real time, and the data will appear live on screen. Point cloud data can then be used for CAD design, RE, or RP

CAD Modeling

The part will be designed and CAD modeled, showing the benefits of 3D design in improving speed and quality of the engineering design process.

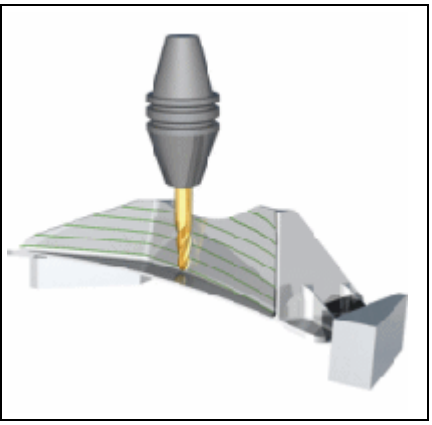

Tool path generation

5 Axis programming presents unique challenges. This demonstration will present easy ways to create effective multi axis CAM programs which are efficient, and safe.

Robot Machining

Robotic Machining offers massive machining volume, in a flexible and adaptive machining cell. Parts can be machined, trimmed, and handled in ways other machining systems can't achieve.

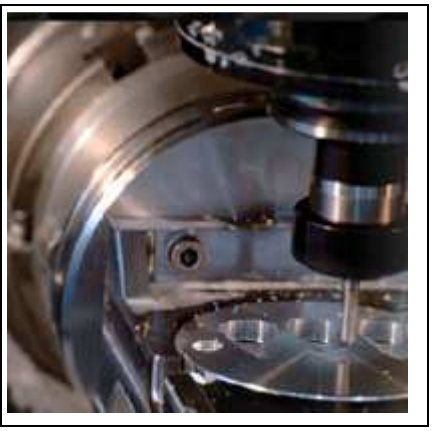

Machining large parts

A live display will demonstrate a Haas VF-5 Vertical Machining Center with a 4th axis Rotary Table machining a scaled Drifter/Drill Mount Body used in the oil industry.

Metrology and Inspection

Machined parts will be inspected and compared to their CAD models, ensuring they are fit to go directly into the field for use.

Partners

HI-TECH METROLOGY	Hi-Tech Metrology represent some of the world's leading metrology and scanning technology brands and have extensive experience at delivering high value turnkey metrology projects and systems to a wide range of clients - both in Australia as well as overseas. The metrology solutions are all designed from the ground up to enhance the client's productivity and achieve their measurement and quality goals.
Solidtec	Solidtec Solutions is focused on the mechanical 3D CAD market in Australia and New Zealand. Solidtec delivers best-in-class products and services to its customers. SolidWorks is core to our product portfolio and when combined with its technical expertise allows Solidtec Solutions to provide an effective and efficient solution to help manufacturing companies shorten their time to market, reduce the cost of new product development and improve design communication.
DiMAC CNC MACHINE TOOL ACCESSORIES	Dimac Tooling supply CNC machine tool accessories for the Australia and New Zealand market. We offer our customers a complete suite of services and products from concept to design and manufacture or off the shelf solutions from quality branded companies around the globe. Solutions range from a simple Oil Skimmer or Mist Extractor to complex workholding systems for milling or turning.
CAMPLEX	Camplex is Australia leading supplier of CAM machining technology. Established in 1988, our experience and expertise is focused on supplying solutions for applications and industries that require cutter paths for any and all types of machining centres.. This applies to specialist industries such as product design, rapid prototyping, tooling manufacturers, metrology and reverse engineering. Our real-world experiences allow a unique insight into the challenges faced by each customer, and allow us to supply industry proven solutions.
SECO	Seco Tools has an established global reputation as a leading supplier of carbide cutting tools and associated equipment. We are represented in more than 50 countries worldwide, with over 25,000 products. Seco Tools has a strong focus on the Mining industry, with the ability to meet customer demands and individual needs. Seco Tools can manufacture custom inserted tip profile and gear cutters for optimum machining, and have the ability to manufacture milling cutters up to 2 metres in diameter via the Custom Tool Department located in Sydney. At Seco Tools we believe we are the leading technical solution provider from design to manufacture, offering the perfect partnership for the Mining industry.
NACHI	Nachi Australia robotic division is dedicated to the implementation of robotic automation solutions that enhance our customers productivity, quality and profitability. The Nachi product line has been designed to optimize robot speed, work envelope, payload capacity, accuracy, size and reliability. The payload capacity range is comprehensive with common loads ranging from 4 kg to 700kg. Nachi Robotics diverse line of manipulators can accommodate virtually any industrial application allowing us to provide our customers with the best solutions for their processes. These robots range from light weight, high speed, highly accurate robots through to the powerful SC700DL capable of lifting 700Kg.
HAAS Haas Automation Inc.	Alfex CNC Australia/Haas Factory Outlet offers a comprehensive range of top quality equipment including Haas CNC Lathes, Haas Vertical & Horizontal Machining Centers, CNC Routers, Hankwang CO2 Laser Cutting & Automation Systems and the Epilog range of CO2 Lasers for cutting & marking and the Epilog Fibermark for direct marking onto metals. Alfex staff are knowledgeable and highly trained in the application and support of its product range and operates from well equipped facilities in all major cities. Alfex/Haas work closely with other specialist suppliers to ensure that customers receive accurate advice in respect to their requirements so that the whole system performs well.

This technology demonstration is Lynx Project activity and has been funded by AusIndustry through the Industry Co-Operative Innovation Program. In Queensland, the workshops are delivered in partnership with QMI Solutions (www.qmisolutions.com.au) and supported by the Queensland Government, while Perth demonstrations are delivered in partnership with Polytechnic West's Midland campus.

AMTIL

An Australian Government Initiative

AusIndustry